# Hardware Manual

## Development Board DK50

## Order No. 539361

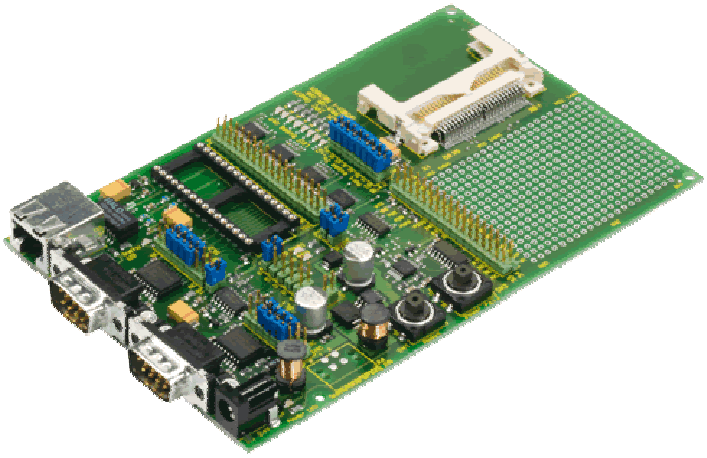

© 2004 Beck IPC GmbH

# Table of Contents

**1. INTRODUCTION ..... 3**

1.1 GENERAL ..... 3
1.2 ACCESSORIES ..... 3
1.3 GETTING STARTED ..... 3

**2. FUNCTIONAL DESCRIPTION ..... 4**

2.1 BLOCK DIAGRAM ..... 4
2.2 ELECTRICAL INTERFACE SPECIFICATION ..... 6
2.2.1 Connector S1: COM interface ..... 6
2.2.2 Connector S2: EXT interface ..... 6
2.2.3 Pin header SL1: COM ..... 7
2.2.4 Pin header SL2: EXT ..... 7
2.2.5 Pin header SL3: SC13 / SC11 pin header ..... 8
2.2.6 Pin header SL4: 8-bit input/output port ..... 10
2.2.7 Pin header SL5: Hardware expansion port ..... 11
2.2.8 Jumper Sx: Description ..... 12
2.2.9 Push-button SW1: Reset ..... 13
2.2.10 Push-button SW3: power fail ..... 13
2.2.11 IC34 socket ..... 13
2.2.12 LED description ..... 13
2.2.13 Connector X1: Compact Flash Card ..... 14
2.2.14 Connector X2: Ethernet ..... 14
2.2.15 Connector X5: Power connector ..... 14
2.3 MECHANICAL SPECIFICATIONS ..... 15
2.4 ENVIRONMENTAL SPECIFICATIONS ..... 15

**3. APPLICATION NOTES ..... 16**

3.1 COMPACT FLASH COMPATIBILITY ..... 16
3.2 EXPANSION EXAMPLE ..... 16
3.3 DATA RETENTION IN THE EVENT OF AN UNEXPECTED POWER FAILURE ..... 16
3.4 ALTERNATIVE POWER CONNECTOR ..... 17

**4. GENERAL CONDITIONS OF USE ..... 18**

4.1 SCOPE OF APPLICATION ..... 18
4.2 EXCLUSION OF WARRANTY AND LIABILITY ..... 18

**5. LABELLING ..... 19**

**6. SCHEMATICS ..... 20**

**7. LIST OF REVISIONS ..... 22**

**8. CONTACT ..... 23**

© 2004 Beck IPC GmbH

# 1. Introduction

## 1.1 General

The Development Board DK50 is an evaluation platform for the new IPC@CHIP Embedded Controller SC11 and SC13. This manual describes the hardware functionality of the DK50 Board.

The development board provides all the basic functions required to put the Embedded Controller SC11 and SC13 into operation, including a bread board area for customer-specific extensions. It provides, for example, a socket for the Embedded Controller, two serial ports, an Ethernet interface with traffic LED, eight digital I/O, Compact Flash socket and a switching DC/DC converter.

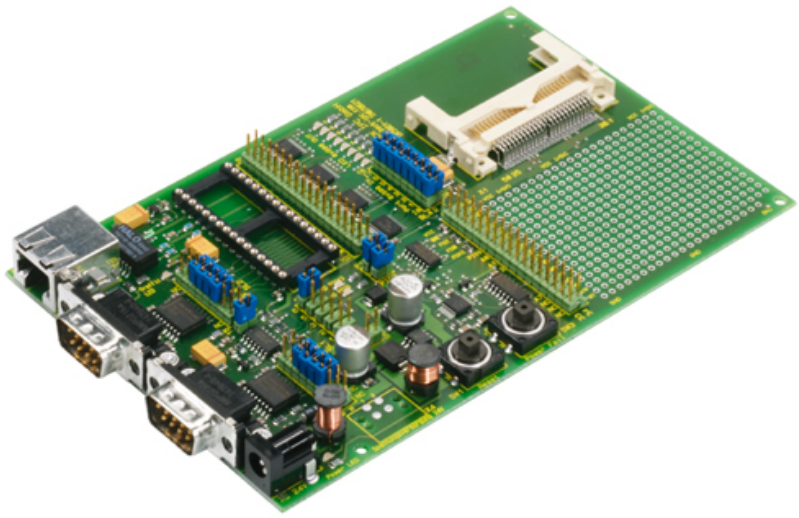

## 1.2 Accessories

The following accessories are not part of the delivery and can be ordered separately:

| Order number: | Accessories: |
|---|---|
| 536079 | SC13 Embedded Web Controller |
| 538428 | SC11 Embedded Controller |
| 195837 | ZK14 serial programming cable |
| 538934 | PSE10 power supply for DK50 |

## 1.3 Getting Started

The functional start-up of the DK50 and software operations are described in the ‘Getting Started IPC@CHIP Embedded Web Controller’ document. You can download the document at:
http://www.beck-ipc.com/ipc/gettingstarted

© 2004 Beck IPC GmbH

# 2. Functional description

## 2.1 Block diagram

The electrical block diagram of the DK50 is shown in the following figure:

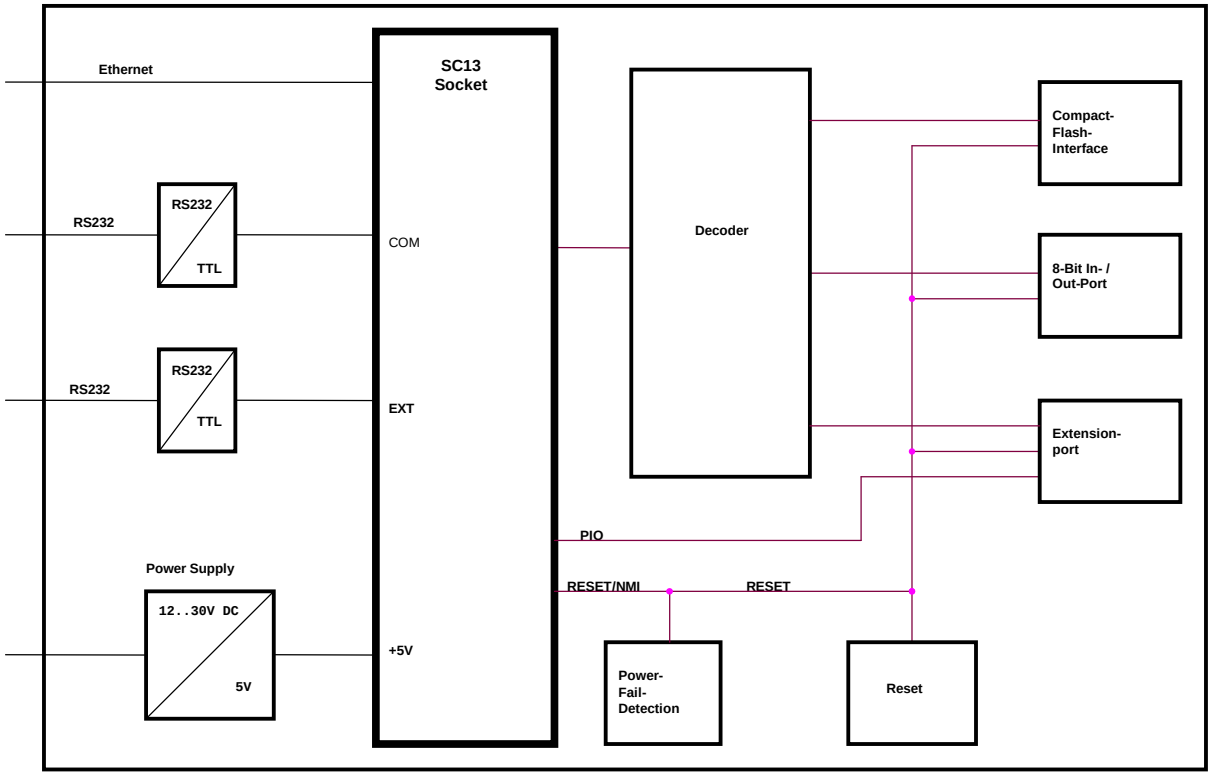


The DK50 provides:

- Socket for Embedded Controller SC11 or SC13
- Power supply with power fail detection
- Power LED
- Reset button
- Power fail button
- Serial port 0 (EXT)
- Serial port 1 (COM)
- Ethernet interface with traffic LED
- Compact Flash socket
- Eight digital outputs with status LEDs
- Eight digital inputs
- SC13 test connector
- Two free programmable LEDs

© 2004 Beck IPC GmbH

The location of the basic functions is shown in the following figure:

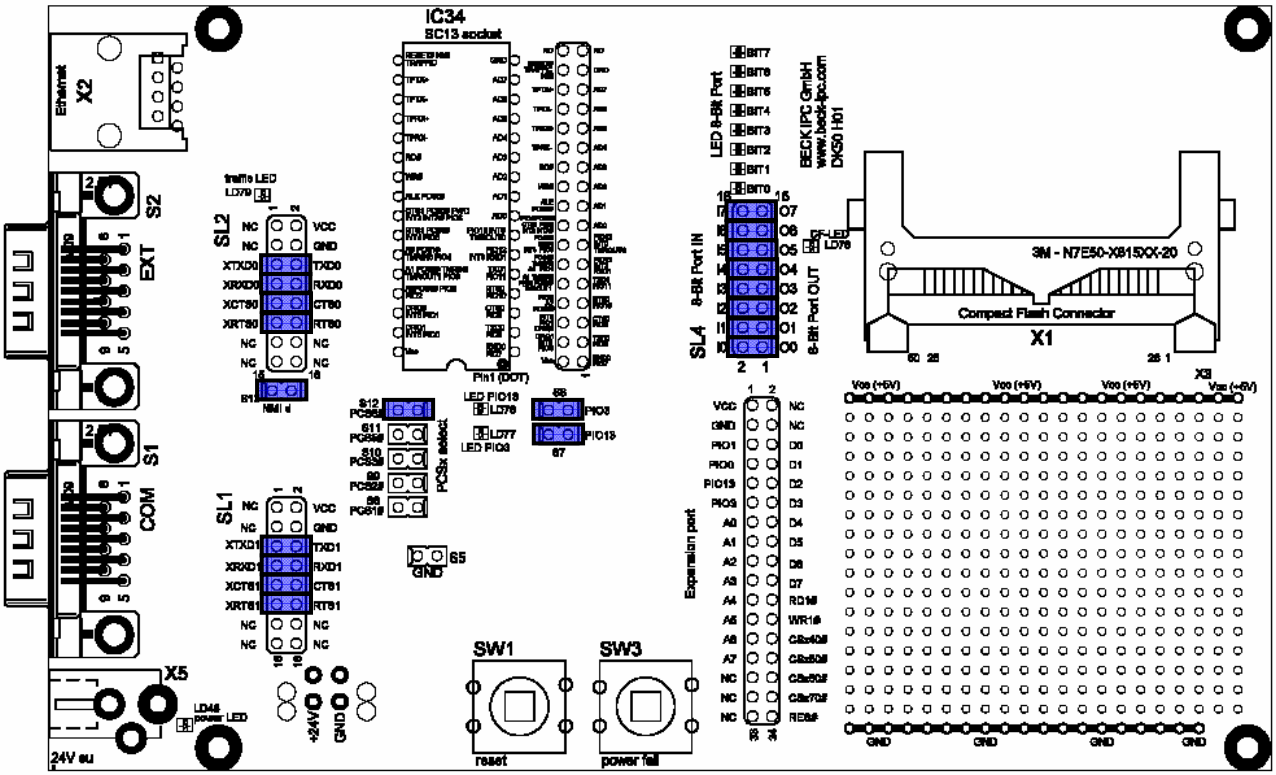


The standard jumper configuration is marked in blue.

## 2.2 Electrical interface specification

### 2.2.1 Connector S1: COM interface

Electrical specification: RS232-level

Default function: Terminal interface (STDIO), 19200 Baud, 8 data bits, no parity, 1 stop bit

Max. baud rate: 115Kbit/s

Pin assignment of the DSUB 9 male connector:

| Pin | Name | Description |
|---|---|---|
| 1 | NC | not connected |
| 2 | RXD | receive data |
| 3 | TXD | transmit data |
| 4 | NC | not connected |
| 5 | GND | ground |
| 6 | NC | not connected |
| 7 | RTS | ready to send |
| 8 | CTS | clear to send |
| 9 | NC | not connected |

### 2.2.2 Connector S2: EXT interface

Electrical specification: RS232-level

Default function: Serial RTOS update interface (BIOS update speed is 115k Baud). The EXT interface can also be used as a terminal interface (see also IPC@CHIP API documentation).

Max. baud rate: 115Kbit/s

Pin assignment of the DSUB 9 male connector:

| Pin | Name | Description |
|---|---|---|
| 1 | NC | not connected |
| 2 | RXD | receive data |
| 3 | TXD | transmit data |
| 4 | NC | not connected |
| 5 | GND | ground |
| 6 | NC | not connected |
| 7 | RTS | ready to send |
| 8 | CTS | clear to send |
| 9 | NC | not connected |

© 2004 Beck IPC GmbH

DSUB connector front view:

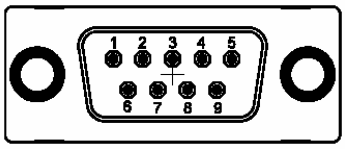


### 2.2.3 Pin header SL1: COM

The four jumpers connecting the pins 5-6 / 7-8 / 9-10 / 11-12 provide a serial RS232 interface on connector S1. Disabling this function provides 5V CMOS logic signals of a possible higher baud rate on pin 6, 8, 10, 12 or allows you to use the alternative SC13 / SC11 functions at these pins.

The standard COM function of the SC11/13 does not use the hardware handshake signals RTS and CTS. It is therefore possible to disable the RTS1 and CTS1 jumper and to use the pins 10, 12 with their alternative function.

| Pin | Name | Description | |
|---|---|---|---|
| 1 | NC | not connected | |
| 2 | +5V | supply voltage output (the external load should not exceed 400mA) | |
| 3 | NC | not connected | |
| 4 | GND | ground | |
| 5 | RS232-TXD | transmit data, RS232 level | (default =closed) |
| 6 | TXD1 | transmit data CMOS logic level | |
| 7 | RS232-RXD | receive data RS232 level | (default =closed) |
| 8 | RXD1 | receive data, CMOS logic level | |
| 9 | RS232-CTS | clear to send, RS232 level | (default =closed) |
| 10 | CTS1 | clear to send, CMOS logic level | |
| 11 | RS232-RTS | ready to send, RS232 level | (default =closed) |
| 12 | RTS1 | ready to send, CMOS logic level | |
| 13-16 | NC | not connected | |

### 2.2.4 Pin header SL2: EXT

The four jumpers connecting the pins 5, 6/7, 8/9, 10/11, 12 provide a serial RS232 interface on connector S2. Disabling this function provides 5V CMOS logic signals of a possible higher baud rate on pin 6, 8, 10, 12 or allows you to use the alternative SC13 / SC11 functions at these pins.

The standard EXT function of the SC11/13 doesn't use the hardware handshake signals RTS and CTS. It is therefore possible to disable the RTS1 and CTS1 jumper and to use the pins 10, 12 with their alternative function.

| PIN | Name | Description |
|---|---|---|
| 1 | NC | not connected |
| 2 | +5V | supply voltage output (the external load should not exceed 400mA) |

© 2004 Beck IPC GmbH

| | | | |
|---|---|---|---|
| 3 | NC | not connected | |
| 4 | GND | ground | |
| 5 | RS232-TXD | transmit data, RS232 level | (default =closed) |
| 6 | TXD1 | transmit data CMOS logic level | |
| 7 | RS232-RXD | receive data RS232 level | (default =closed) |
| 8 | RXD1 | receive data, CMOS logic level | |
| 9 | RS232-CTS | clear to send, RS232 level | (default =closed) |
| 10 | CTS1 | clear to send, CMOS logic level | |
| 11 | RS232-RTS | ready to send, RS232 level | (default =closed) |
| 12 | RTS1 | ready to send, COMS logic level | |
| 13-16 | NC | not connected | |

### 2.2.5 Pin header SL3: SC13 / SC11 pin header

The Embedded Controller pins are connected to this connector to enable hardware extensions or measurements.

| Pin | Name | Description |
|---|---|---|
| 1 | PIO7<br>RXD0 | Programmable I/O Pin<br>Receive Data |
| 2 | PIO8<br>TXD0 | Programmable I/O Pin<br>Transmit Data |
| 3 | PIO9<br>CTS0 | Programmable I/O Pin<br>Clear To Send |
| 4 | PIO10<br>RTS0 | Programmable I/O Pin<br>Ready To Send |
| 5 | PIO11<br>TXD1 | Programmable I/O Pin<br>Transmit Data |
| 6 | PIO12<br>INT3<br>RXD1 | Programmable I/O Pin<br>Maskable Interrupt<br>Receive Data |
| 7 | PIO13<br>INT0<br>TMROUT0 | Programmable I/O Pin<br>Maskable Interrupt<br>Timer Output |
| 8 | AD0 | Multiplexed address bus |
| 9 | AD1 | |
| 10 | AD2 | |
| 11 | AD3 | |
| 12 | AD4 | |
| 13 | AD5 | |
| 14 | AD6 | |
| 15 | AD7 | |
| 16 | GND | GND |
| 17 | RESET#<br>NMI<br>Traffic_LED | Reset<br>Non Maskable Interrupt<br>Ethernet Traffic |
| 18 | TPTX+ | Twisted Pair Driver |
| 19 | TPTX- | Twisted Pair Driver |
| 20 | TPRX+ | Twisted Pair Receive |
| 21 | TPRX- | Twisted Pair Receive |
| 22 | RD# | Read Enable |
| 23 | WR# | Write Enable |

© 2004 Beck IPC GmbH

| | | |
|---|---|---|
| 24 | ALE<br>PCS0# | Address Latch Enable<br>Peripheral Chip Selects |
| 25 | CTS1<br>PCS2#<br>INT2<br>PWD<br>INTA#<br>PIO6 | Clear To Send<br>Peripheral Chip Selects<br>Maskable Interrupt<br>Pulse Width Demodulation<br>Interrupt Acknowledge<br>Programmable I/O Pin |
| 26 | RTS1<br>PCS3#<br>INT4<br>PIO5 | Ready To Send<br>Peripheral Chip Selects<br>Maskable Interrupt<br>Programmable I/O Pin |
| 27 | A0<br>PCS1#<br>TMRIN0<br>PIO4 | Non Multiplexed Address Bus<br>Peripheral Chip Selects<br>Timer Input<br>Programmable I/O Pin |
| 28 | A1<br>PCS5#<br>TMRIN1<br>TMROUT1<br>PIO3 | Non Multiplexed Address Bus<br>Peripheral Chip Selects<br>Timer Input<br>Timer Output<br>Programmable I/O Pin |
| 29 | A2<br>PCS6#<br>PIO2 | Non Multiplexed Address Bus<br>Peripheral Chip Selects<br>Programmable I/O Pin |
| 30 | DRQ0<br>INT5<br>PIO1 | DMA Request<br>Maskable Interrupt<br>Programmable I/O Pin |
| 31 | DRQ1<br>INT6<br>PIO0 | DMA Request<br>Maskable Interrupt<br>Programmable I/O Pin |
| 32 | VCC | +5V Power supply |

For technical details about the Embedded Web Controller Family please download the IPC@CHIP Hardware Manual at: http://www.beck-ipc.com/ipc/download

© 2004 Beck IPC GmbH

### 2.2.6 Pin header SL4: 8-bit input/output port

This connector provides an 8-bit input and an 8-bit output port. The default port address 0x600 can be changed with the PCSx select jumper (S8..S12). The output port is equipped with status LEDs.

Output HIGH = LED lights up

Output LOW = LED dark

Each output pin can drive 5V / 20mA source, 40mA sink (do not drive more than 60mA at the whole port).

In their default state the outputs are connected with jumper to the inputs. The inputs and outputs can be used separately. In this case the jumpers have to be removed in order to avoid problems due to two different signal levels. The input and output pins are conform to TTL logic input and output logic level specifications.

| Pin | Name | Description | Pin | Name | Description |
|---|---|---|---|---|---|
| 1 | I0 | input bit 0 | 2 | O0 | output bit 0 |
| 3 | I1 | input bit 1 | 4 | O1 | output bit 1 |
| 5 | I2 | input bit 2 | 6 | O2 | output bit 2 |
| 7 | I3 | input bit 3 | 8 | O3 | output bit 3 |
| 9 | I4 | input bit 4 | 10 | O4 | output bit 4 |
| 11 | I5 | input bit 5 | 12 | O5 | output bit 5 |
| 13 | I6 | input bit 6 | 14 | O6 | output bit 6 |
| 15 | I7 | input bit 7 | 16 | O7 | output bit 7 |

I/O port examples to use this port from the command shell:

Switch on port bits 0..3, switch off port bits 4..7:

ALE 1 enables the ALE function

PCS 6 enable the PCS6 function

OB 600 0F write hex-byte 0F to I/O address 600 hex

Print input state of the I/O port:

ALE 1 enables the ALE function

PCS 6 enable the PCS6 function

IB 600 display the input state of the I/O address 600 hex

© 2004 Beck IPC GmbH

### 2.2.7 Pin header SL5: Hardware expansion port

This pin header can be also used for hardware expansions, with the provided signals and ready to connect I/O ports etc. to the DK50.

| Pin | Name | Direction | Description |
|---|---|---|---|
| 1 | Vcc | | +5V supply for the external load (should not exceed 400mA) |
| 2 | GND | | ground |
| 3 | NC | | not connected |
| 4 | NC | | not connected |
| 5 | PIO1 | I/O | SC13 / SC11 PIO pin, not buffered, with 10k Ohm pull up resistor for I2C functionality |
| 6 | D0 | I/O | multiplexed address/data bus, bit 0 |
| 7 | PIO0 | I/O | SC13 / SC11 PIO pin, not buffered, with 10k Ohm pull up resistor for I2C functionality |
| 8 | D1 | I/O | multiplexed address/data bus, bit 1 |
| 9 | PIO13 | I/O | SC13 / SC11 PIO pin, not buffered |
| 10 | D2 | I/O | multiplexed address/data bus, bit 2 |
| 11 | PIO3 | I/O | SC13 / SC11 PIO pin, not buffered |
| 12 | D3 | I/O | multiplexed address/data bus, bit 3 |
| 13 | A0 | O | latched address bus, bit 0 |
| 14 | D4 | I/O | multiplexed address/data bus, bit 4 |
| 15 | A1 | O | latched address bus, bit 1 |
| 16 | D5 | I/O | multiplexed address/data bus, bit 5 |
| 17 | A2 | O | latched address bus, bit 2 |
| 18 | D6 | I/O | multiplexed address/data bus, bit 6 |
| 19 | A3 | O | latched address bus, bit 3 |
| 20 | D7 | I/O | multiplexed address/data bus, bit 7 |
| 21 | A4 | O | latched address bus, bit 4 |
| 22 | RD1# | O | buffered SC13 / SC11 RD# signal<br>The data at the address/data bus (D0..7) is valid with the rising edge at this signal |
| 23 | A5 | O | latched address bus, bit 5 |
| 24 | WR1# | O | buffered SC13 / SC11 WR# signal<br>The data at the address/data bus (D0..7) is valid with the rising edge at this signal |
| 25 | A6 | O | latched address bus, bit 6 |
| 26 | CSx40# | O | These signals (CS0x40#, CS0x50#, CS0x60# and CS0x70#) are four low active chip selects for external hardware expansions. They indicate sub- |

© 2004 Beck IPC GmbH

| | | | |
|---|---|---|---|
| | | | address areas of 16 bytes according to the selected PCSx signal (Jumper S8,S9,S10,S11 and S12).<br>For example: Selected PCSx: PCS5# (Jumper S11)<br>CS0x40# = address area 540hex ..54Fhex<br>CS0x50# = address area 550hex ..54Fhex<br>CS0x60# = address area 560hex ..56Fhex<br>CS0x70# = address area 570hex ..57Fhex<br>With a low signal, the system indicates to the external hardware an I/O operation at the specified address area. |
| 27 | A7 | O | latched address bus, bit 7 |
| 28 | CSx50# | O | see also pin 26 |
| 29 | NC | | not connected |
| 30 | CSx60# | O | see also pin 26 |
| 31 | NC | | not connected |
| 32 | CSx70# | O | see also pin 26 |
| 33 | NC | | not connected |
| 34 | RES# | O | Reset from the reset button and Power on reset. Low active. Min. pulse width = 100ms. |

### 2.2.8 Jumper Sx: Description

**S5:** GND both pins are ground points for measurement

**S6:** PIO 3 (default = closed) opening this jumper disables the PIO3 LED

**S7:** PIO13 (default = closed) opening this jumper disables the PIO13 LED

**S8, S9, S10, S11, S12:** PCSx select

PCSx selection of a 256 byte I/O area. The selection influences the used addresses for the Compact Flash X1, the SL4 I/Os. On the expansion port SL5 the data bus and the four chip selects CSx40#, CSx50#, CSx60#, and CSx70# are influenced by this setting.

Default for x = PCS6#, which is the setting for the base address 0x600. Possible further selections are PCS5#, PCS3#, PCS2# or PCS1#,

Note: Due to the multifunctional pins of the IPC@CHIP, the CTS1 jumper from the SL1 connector must be disabled if PCS2# is used and the jumper from RTS1 if PCS3# is used.

**S13:** Power-Fail-Detection Enable/Disable

default = closed/enabled

© 2004 Beck IPC GmbH

If the Jumper is closed, the power fail circuitry will detect an under-voltage below 16V at the external power supply input and will cause an NMI at the SC13 / SC11 RESET#/NMI/TRAFFIC pin. As soon the NMI procedure is started within the SC13 / SC11 the supply voltage must be brought to a voltage of at least 19V to restart the SC13 / SC11.
Removing the jumper will disable the under-voltage detection. The power fail button can still be used. This is helpful when using the DK50 with a supply voltage below 16V.

### 2.2.9 Push-button SW1: Reset

Resets the SC13 / SC11, the Compact Flash Card and the 8-bit port. This reset function can also be used at the expansion port (SL5) at pin 34 RES#.

### 2.2.10 Push-button SW3: power fail

This push-button simulates a power fail by forcing a NMI at the SC13 / SC11.

### 2.2.11 IC34 socket

This is the socket for the SC13 / SC11. The small dot at the corner of the SC13 / SC11 represents the pin 1.

### 2.2.12 LED description

Power LED
Displays the supply voltage (+5V) state.

Traffic LED
This LED is for visual monitoring of the Ethernet. The LED dims according to the traffic on the Ethernet.
Please note: This is not a link-status LED. The LED remains dark, when the Ethernet is connected to the DK50 and there is no traffic on the Ethernet.

PIO3 LED
Free programmable PIO3 LED can be accessed at the command line with the PIO command:
PIO 3 4 switch LED at PIO3 off
PIO 3 5 switch LED at PIO3 on
Use the PIO command without parameters to display the state of all PIO pins.

PIO13 LED
Free programmable PIO13 LED can be accessed at the command line with the PIO command
PIO 13 4 switch LED at PIO13 on
PIO 13 5 switch LED at PIO13 off
Use the PIO command without parameters to display the state of all PIO pins.

Compact Flash LED
Compact Flash Card activity LED.

© 2004 Beck IPC GmbH

### 2.2.13 Connector X1: Compact Flash Card

Compact Flash Card socket.

This Compact Flash Card interface provides an 8-bit True IDE Mode.

For the Compact Flash Cards Type I according to the Compact Flash Specification Rev 2.0 published by the Compact Flash Association.

### 2.2.14 Connector X2: Ethernet

Ethernet connector 100/10 BaseT LAN interface

The Ethernet is not usable together with the SC11 Embedded Controller.

Pin assignment of the RJ45 connector:

| Pin | Name | Description |
|---|---|---|
| 1 | TX+ | transmit data, differential |
| 2 | TX- | transmit data, differential |
| 3 | RX+ | receive data, differential |
| 4 | | |
| 5 | | |
| 6 | RX- | receive data, differential |
| 7 | | |
| 8 | | |

### 2.2.15 Connector X5: Power connector

Supply voltage: 24V DC (12V .. 30V)

Power consumption: 3.5 watts max. including the SC13 / SC11 and Compact Flash Card

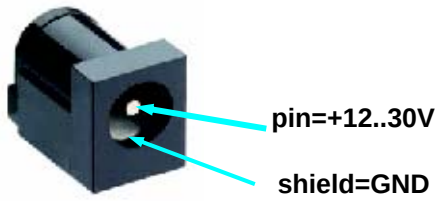


© 2004 Beck IPC GmbH

## 2.3 Mechanical specifications

| | |
|---|---|
| Length: | 167 mm |
| Width: | 100 mm |
| Height: | 17 mm |
| Weight: | 110 g (without Embedded Controller) |

## 2.4 Environmental specifications

**Temperature:**

| | |
|---|---|
| Non-operating (storage): | -25°C to 70°C (EN60068-2-1/2) |
| Operating: | 0°C to 55°C (EN 60068-2-1/2) |
| Changes: | EN 60068-2-14 |

**Electrical:**

| | |
|---|---|
| DC Input voltage: | 24 V typical (12...30V), max. ripple 250mVp-p |
| Power dissipation: | 3.5 W max. without extensions |
| DC Input current: | 500 mA / 5V typical without extensions |
| Max load on +5V: | 400 mA for customer specific extensions |
| Logic Inputs: | TTL; 0 to +5 V |

**Approbation:**

None

© 2004 Beck IPC GmbH

# 3. Application notes

## 3.1 Compact Flash compatibility

The Development Board DK50 has been tested with CF cards from Sandisk, Toshiba and Lexar. Compatibility problems have been reported with some CF cards from Kingston and Extrememory. For the use of the Compact Flash Card the EXTIDE.EXE driver must be started already on the SC13 / SC11. The EXTIDE.EXE driver can be downloaded at:

http://www.beck-ipc.com/ipc/download/extide

The reason for the problems with some CF cards are over- and undershoots on the signal lines because of the fast switching signal drivers combined with the layout design.

In the redesigned DK50 D1-2 H02 serial resistors reducing this over and undershoots at the signal lines to the CF (IORD#, IOWR, A0, A1 and A2). For details please refer to the DK50 D1-2 schematic.

Please note: For designs similar to the DK50 these 5 resistor values have to be adapted, because the signal quality depends on the printed circuit board track length and routing.

## 3.2 Expansion example

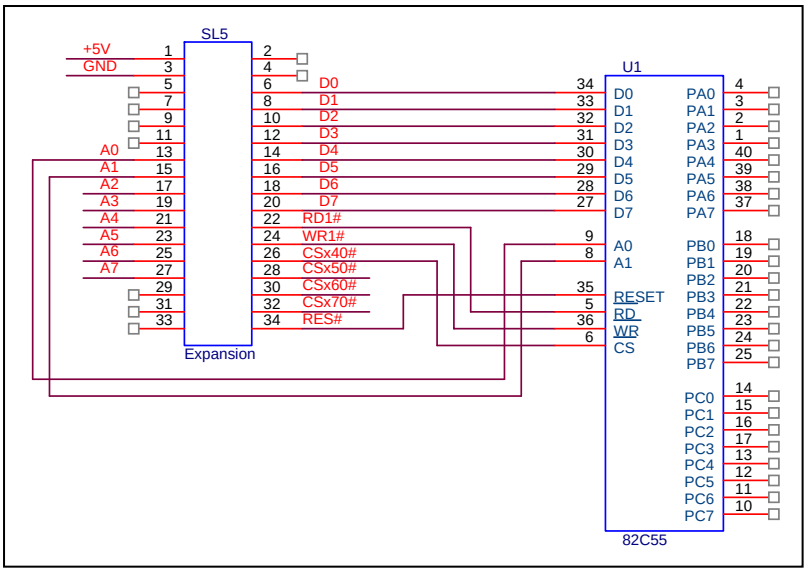


The circuitry shows an easy expansion example with the DK50 development board.

## 3.3 Data retention in the event of an unexpected power failure

The Power Fail circuit will trigger an NMI in the SC13 / SC11 if the operating voltage falls below 16VDC. This enables the processor to interrupt the running program in order to save important data quickly or to close any files that are still open on the Compact Flash card. In order that the processor has sufficient time for these tasks, an additional capacitor on the 24VDC side is required to store sufficient energy. This capacitor must be added to the DK50 board (i.e. on bread board area).

© 2004 Beck IPC GmbH

Typically 50ms are required to close only open files on the Compact Flash card, and additionally 100ms are required to write 2Kbyte of non-volatile data to the SC13 / SC11.

We recommend adding a 3300µF/35V aluminum electrolytic capacitor per 100ms for data retention in case of unexpected power failure.
The figure shows the connection of an external capacitor to the DK50 board (capacitor plus pole on the cathode of diode ZD2):

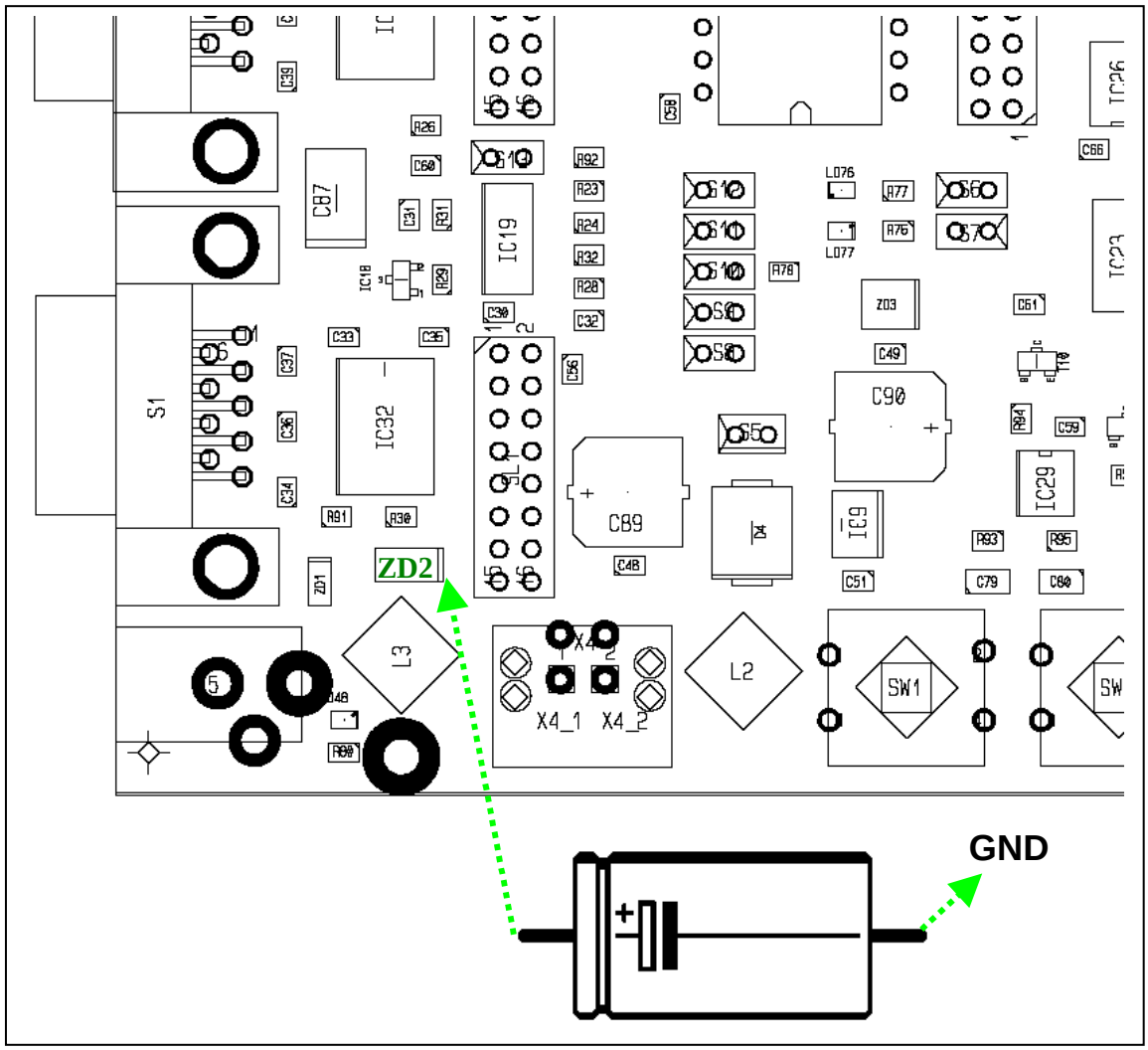


## 3.4 Alternative power connector

Connector X4 is vacant for an alternative power supply connector. The X4 connector pins are connected to the X5 power supply connector pins.

| PIN | Name | Description |
|---|---|---|
| 1 | +24V | Supply Voltage (+12..30V) |
| 2 | GND | GND |

# 4. General conditions of use

## 4.1 Scope of application

Use of the DK51 Development Kit is permissible exclusively under the conditions stated below. These conditions of use shall be deemed as accepted with the commissioning of the Development Kit.

## 4.2 Exclusion of warranty and liability

This product is a development system without CE mark. The system must therefore only be used for hardware/software development. Use of the Development Kit outside the specified environment is the responsibility of the user and shall be carried out at his or her own risk, exempting Beck from any liability.
Claims by the user for compensation against Beck in conjunction with the use of this product shall be excluded.

Insofar that information, hardware, software and documentation is transferred without charge, liability is excluded for any material defects and deficiencies in title of the information, hardware, software and documentation, in particular for their correctness or absence of faults, completeness and/or usability.

© 2004 Beck IPC GmbH

# 5. Labelling

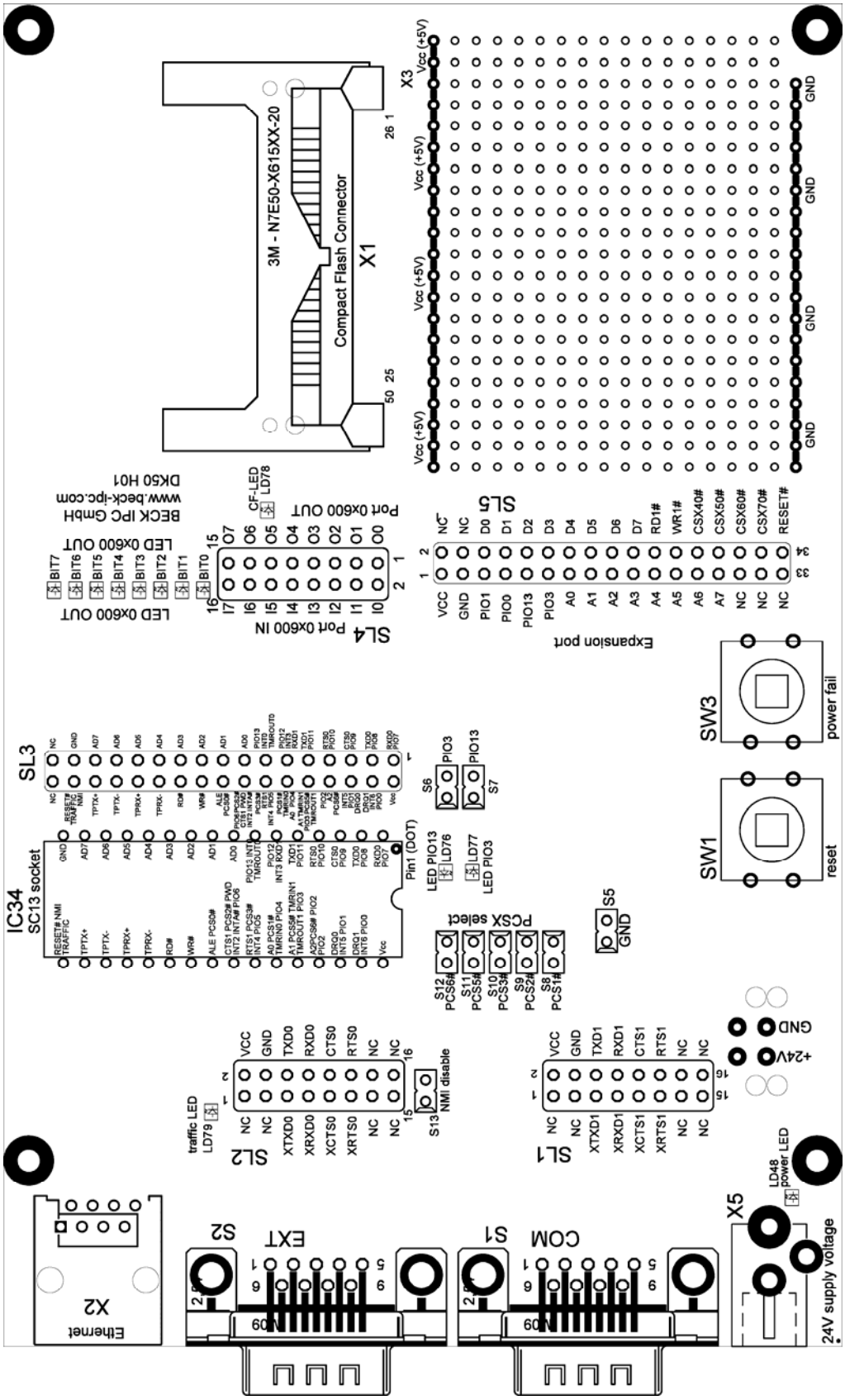
3M - N7E50-X615XX-20
Compact Flash Connector
X1
X3
Vcc (+5V)
GND
SL5
SL4
Port 0x600 IN
Port 0x600 OUT
LED 0x600 OUT
CF-LED LD78
BECK IPC GmbH
www.beck-ipc.com
DK50 H01
Expansion port
SW3
power fail
SW1
reset
IC34
SC13 socket
SL3
Pin1 (DOT)
LED PIO13 LD76
LD77 LED PIO3
S6 PIO3
S7 PIO13
PCSX select
S12 PCS6#
S11 PCS5#
S10 PCS3#
S9 PCS2#
S8 PCS1#
S5 GND
SL2
SL1
traffic LED LD79
NMI disable S13
+24V
GND
X2
Ethernet
S2
EXT
S1
COM
X5
LD48 power LED
24V supply voltage

# 6. Schematics

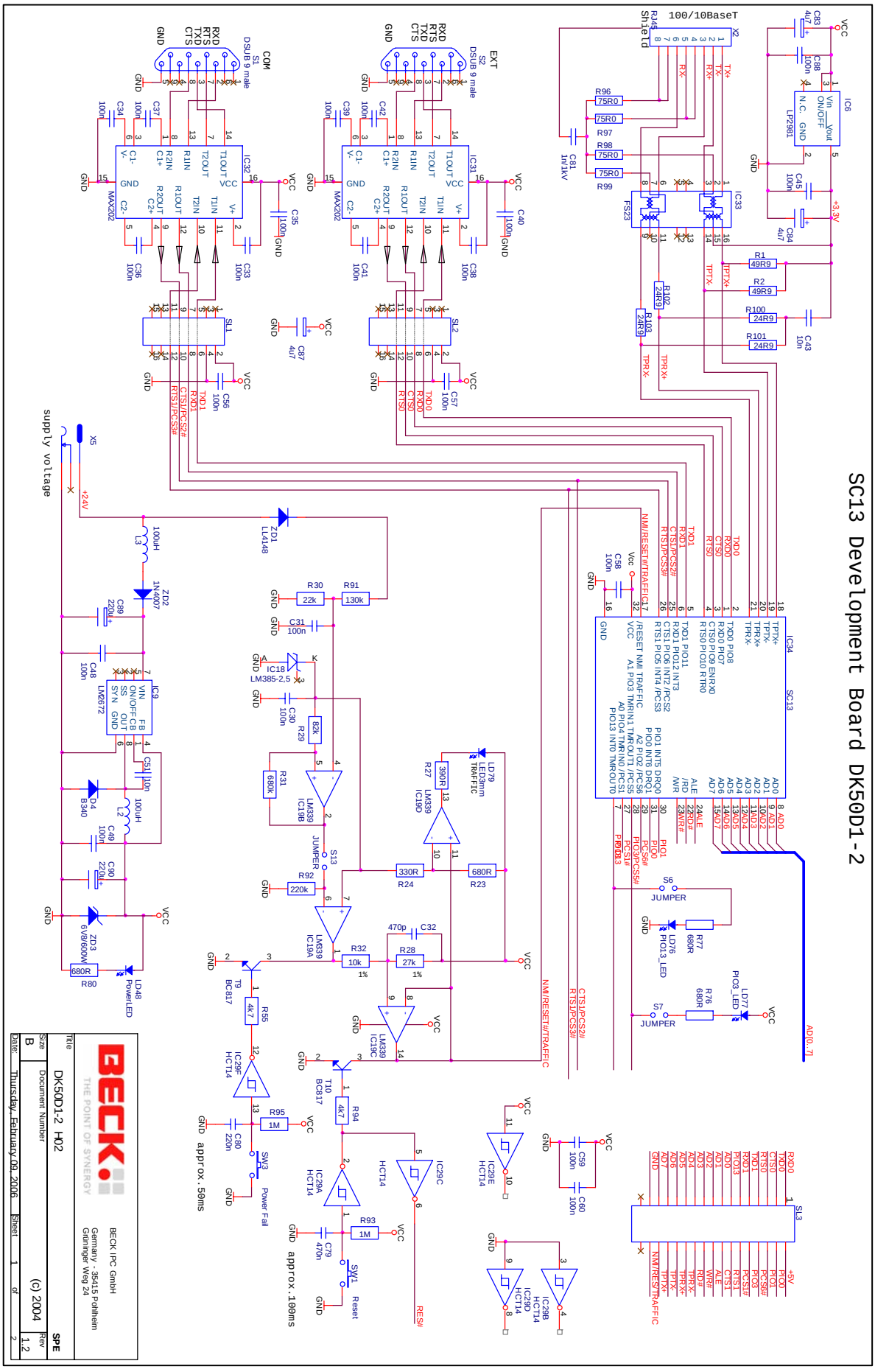

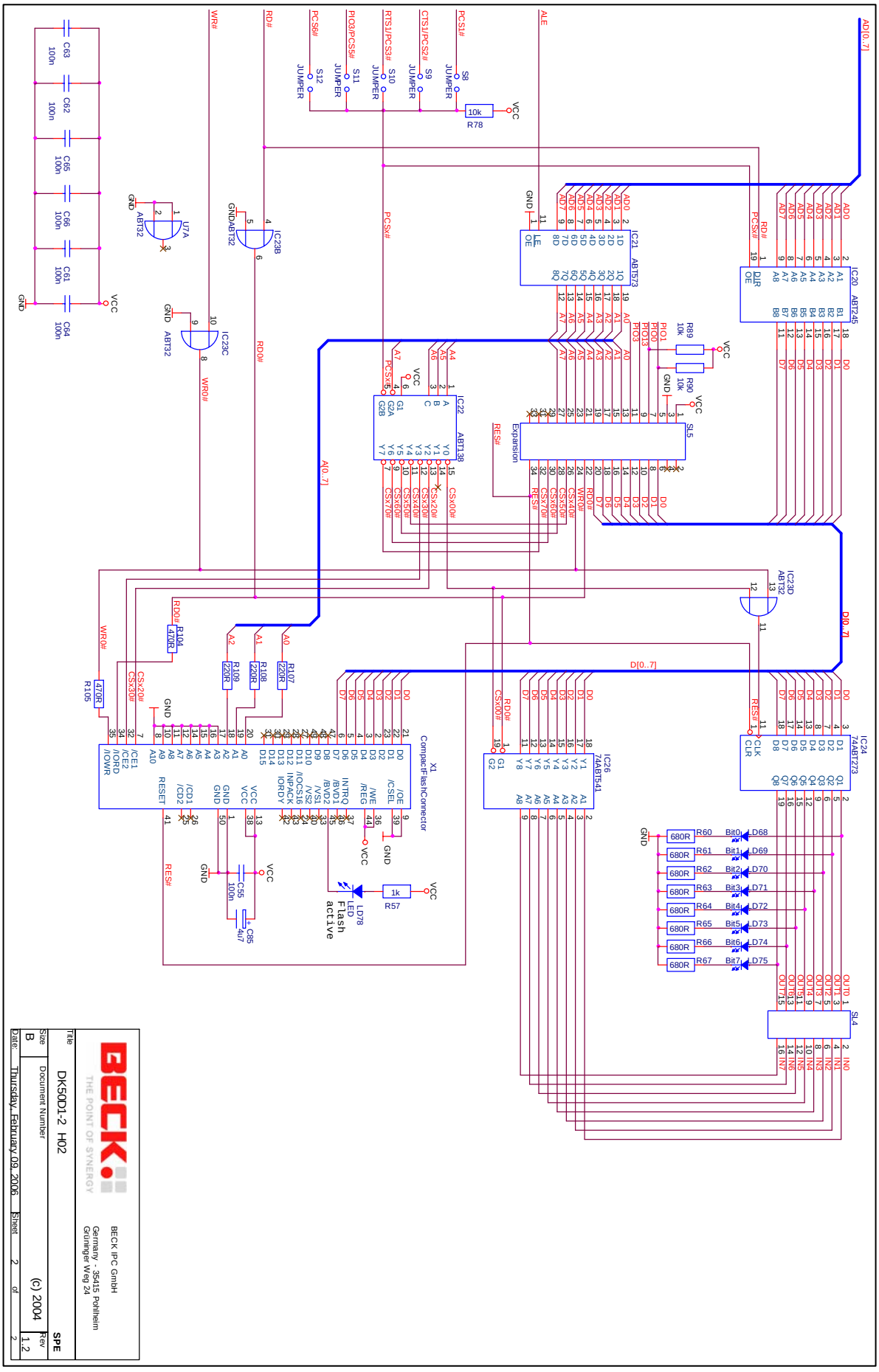
BECK IPC GmbH
Germany - 35415 Pohlheim
Grüninger Weg 24
Title
DK50D1-2 H02
SPE
Size
B
Document Number
(c) 2004
Rev
1.2
Date: Thursday, February 09, 2006
Sheet 2 of 2

# 7. List of revisions

| Rev. | Comments |
|---|---|
| 1.2 | Initial revision |
| 1.3 | address update |
| 1.4 | DK50 redesign (DK50 D1-2 H02): serial resistors in CF signals |
| 1.5 | schematic update |

© 2004 Beck IPC GmbH

# 8. Contact

BECK IPC GmbH
Grüninger Weg 24
D-35415 Pohlheim
Germany
Phone: +49 (0)6404-695-0
Fax: +49 (0)6404-695-205
Internet: www.beck-ipc.com
E-Mail: info@beck-ipc.com

**©2004 BECK IPC GmbH All rights reserved.** No part of this document may be copied or reproduced in any form or by any means without the prior written consent of BECK IPC GmbH. The information in this document is subject to change without notice. Devices sold by BECK IPC GmbH are covered by warranty and patent indemnification provisions appearing in BECK IPC GmbH Terms and Conditions of Sale only.

BECK IPC GmbH MAKES NO WARRANTY, EXPRESS, STATUTORY, IMPLIED OR BY DESCRIPTION, REGARDING THE INFORMATION SET FORTH HEREIN OR REGARDING THE FREEDOM OF THE DESCRIBED DEVICES FROM INTELLECTUAL PROPERTY INFRINGEMENT. BECK IPC GmbH MAKES NO WARRANTY OF MERCHANTABILITY OR FITNESS FOR ANY PURPOSE.

BECK IPC GmbH shall not be responsible for any errors that may appear in this document. BECK IPC GmbH makes no commitment to update or keep current the information contained in this document.

**Life critical applications** - BECK products are not authorised for use as critical components in life support devices or systems unless a specific written agreement pertaining to such intended use is executed between the customer and BECK prior to use. Life support devices or systems are those which are intended for surgical implantation into the body, or which sustain life, and whose failure to perform, when properly used in accordance with instructions for use provided in the labelling, can be reasonably expected to result in significant injury to the user. BECK IPC GmbH customers using or selling these products for use in such applications do so at their own risk and agree to fully indemnify BECK IPC GmbH for any damages resulting from such application.

**Right to make changes** - Beck IPC GmbH reserves the right to make changes without notice in the products, including software, described or contained herein in order to improve design and/or performance. Beck IPC GmbH assumes no responsibility or liability for the use of any of these products.